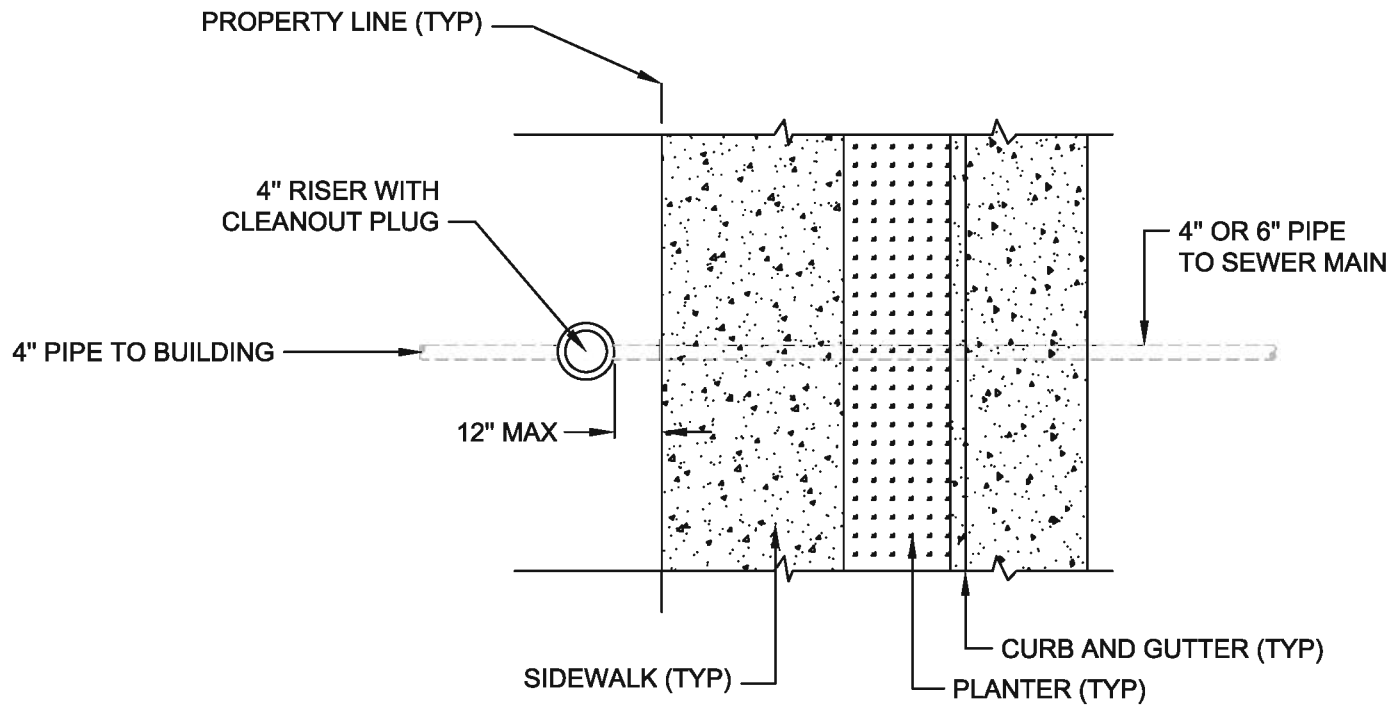

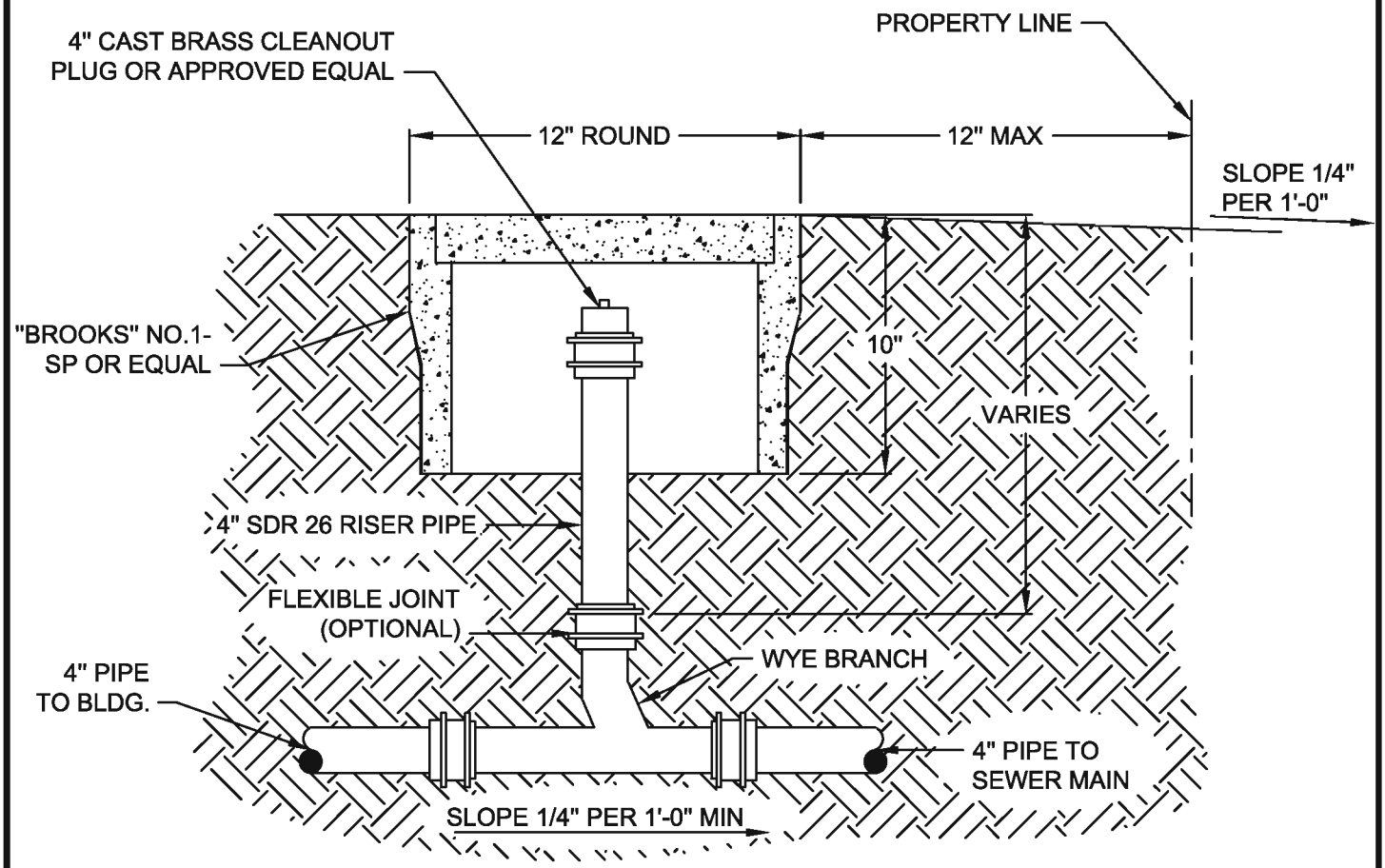

NOTE: WHEN MODIFIED CURB, GUTTER, AND SIDEWALK, MEANDERING SIDEWALKS, OR ANY OTHER SPECIAL CASES ARE ENCOUNTERED, CLEANOUTS AND OTHER UTILITY LOCATIONS SHALL BE DETERMINED BY THE ENGINEER AT THE TIME THE SUBDIVISION PLANS ARE SUBMITTED FOR APPROVAL.

NO.	REVISED	BY		
			Cleanout Riser	APPROVED CITY ENGINEER RCE-28191
				DATE: 2-2-99
DRAWN BY: MATT				
CHECKED BY: DJR			**CITY OF RIPON**	STANDARD NO. **S-10**
V:\25_City of Ripon Standards\Standard Specifications\Drawings\Sewer\S-10.dwg				